ARDUINO MKR WIFI 1010

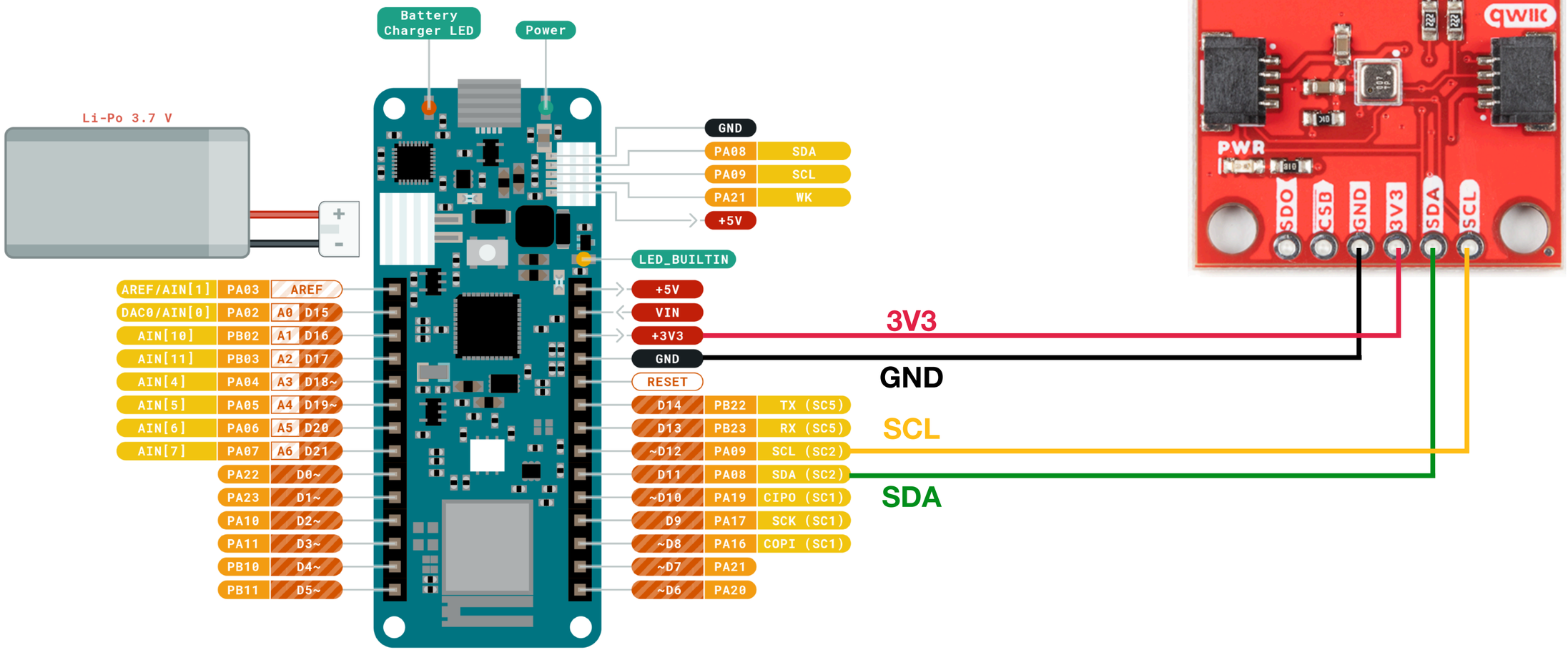

Ground	Internal Pin	Digital Pin	Microcontroller's Port
Power	SWD Pin	Analog Pin	
LED	Other Pin	Default	

ARDUINO.CC

This work is licensed under the Creative Commons Attribution-ShareAlike 4.0 International License. To view a copy of this license, visit http://creativecommons.org/licenses/by-sa/4.0/ or send a letter to Creative Commons, PO Box 1866, Mountain View, CA 94042, USA.

ESP32-PICO-KIT

ESPRESSIF

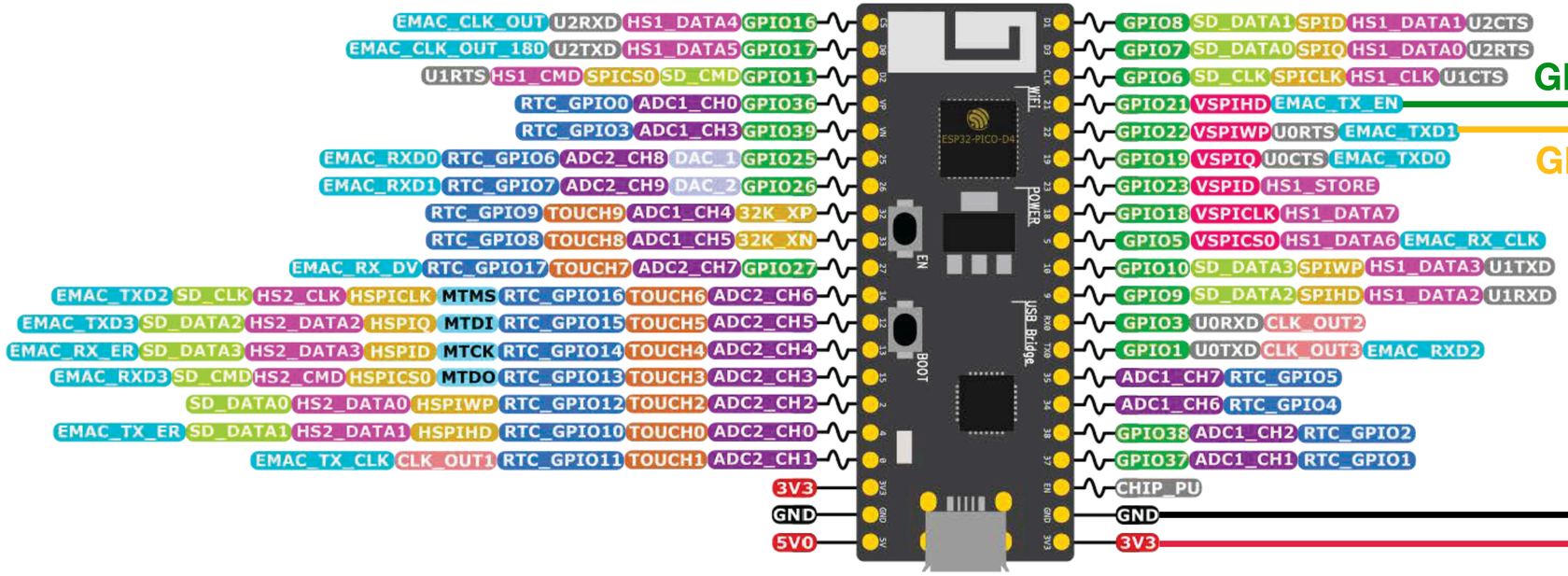

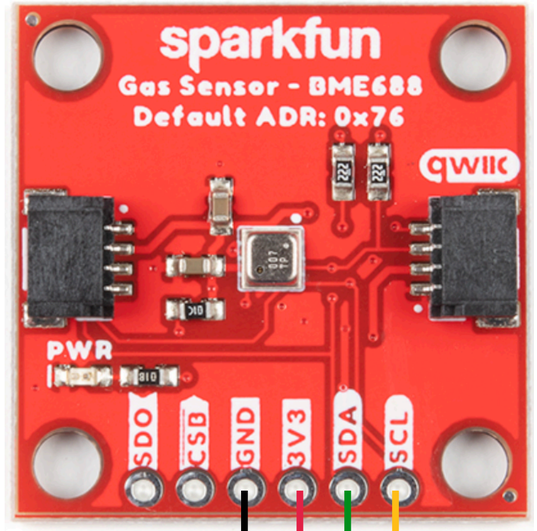

GPIO21 SDA

GPIO22 SCL

GND

3V3

PWM Capable Pin

- General Purpose Input and Output
- Analog-to-Digital Converter
- Touch Sensor Input Channel
- Strapping Pin Functions
- External Flash Memory (SPI)
- Functions related to SD Card
- Other Related Functions
- Serial for Debug/Programming
- Ethernet Functions
- JTAG for Debugging and/or USB
- Ground Plane
- Power Rails (3V3 and 5V)
- RTC Power Domain (VDD3P3_RTC)
- Digital-to-Aanlog Converter
- Clock Function Output

ESP32 Specs

32-bit Xtensa® dual-core @240MHz
Wi-Fi IEEE 802.11 b/g/n 2.4 GHz
Bluetooth 4.2 BR/EDR and BLE
520 KB SRAM (16 KB for cache)
448 KB ROM
34 GPIOs, 4x SPI, 3x UART, 2x I2C,
1 slave SDIO/SPI, TWAI®, 12-bit ADC, Ethernet

LED

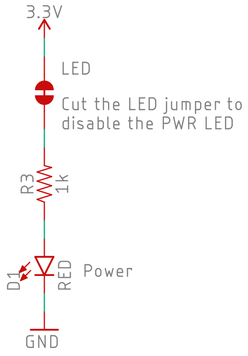

I2C Pull-Up

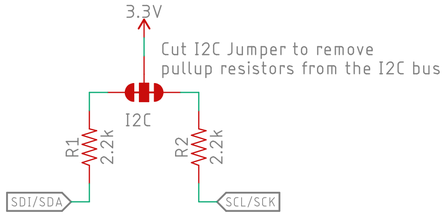

BME688 Gas Sensor

NOTE: This circuitry defaults to I2C communication (address 0x76). If you wish to communicate over SPI, please cut the CSB jumper AND the ADR jumper. Then use the SDO, SDI, SCK, and CSB holes on the board edge.

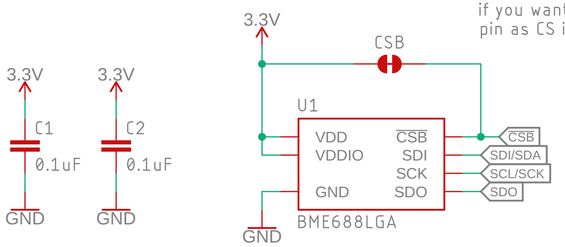

Vdd range: 1.71 to 3.6V
Vddio range: 1.2 to 3.6V
Current consumption: 3.9 mA in standard gas scan mode

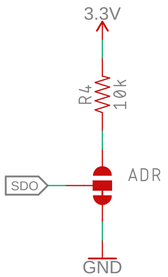

Default, 7-bit unshifted
I2C address: 0x76

Cut this jumper
and connect to Vddio
for I2C address: 0x77

Cut this jumper and
leave SDO unconnected
for SPI operation!

Connectors

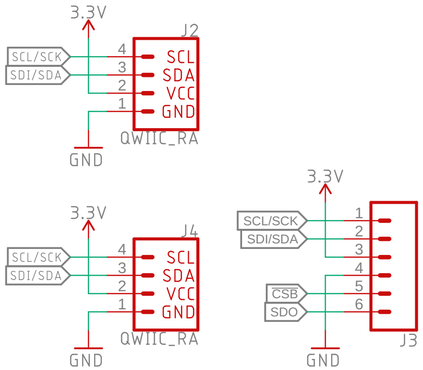

Jumper setup for Interface
Default: I2C

CSB	SDA	SCL	ADR	Interface
1	1	1	1 or 0	I2C
float	1	1	float	SPI

sparkfun

Special Instructions

Released under the Creative Commons
Attribution Share-Alike 4.0 License
https://creativecommons.org/licenses/by-sa/4.0/

TITLE: Qwiic_BME688

Design by: Priyanka Makin

REV: v10

Date: 4/7/2022 11:21 AM

Sheet: 1/1

open hardware

qwiic

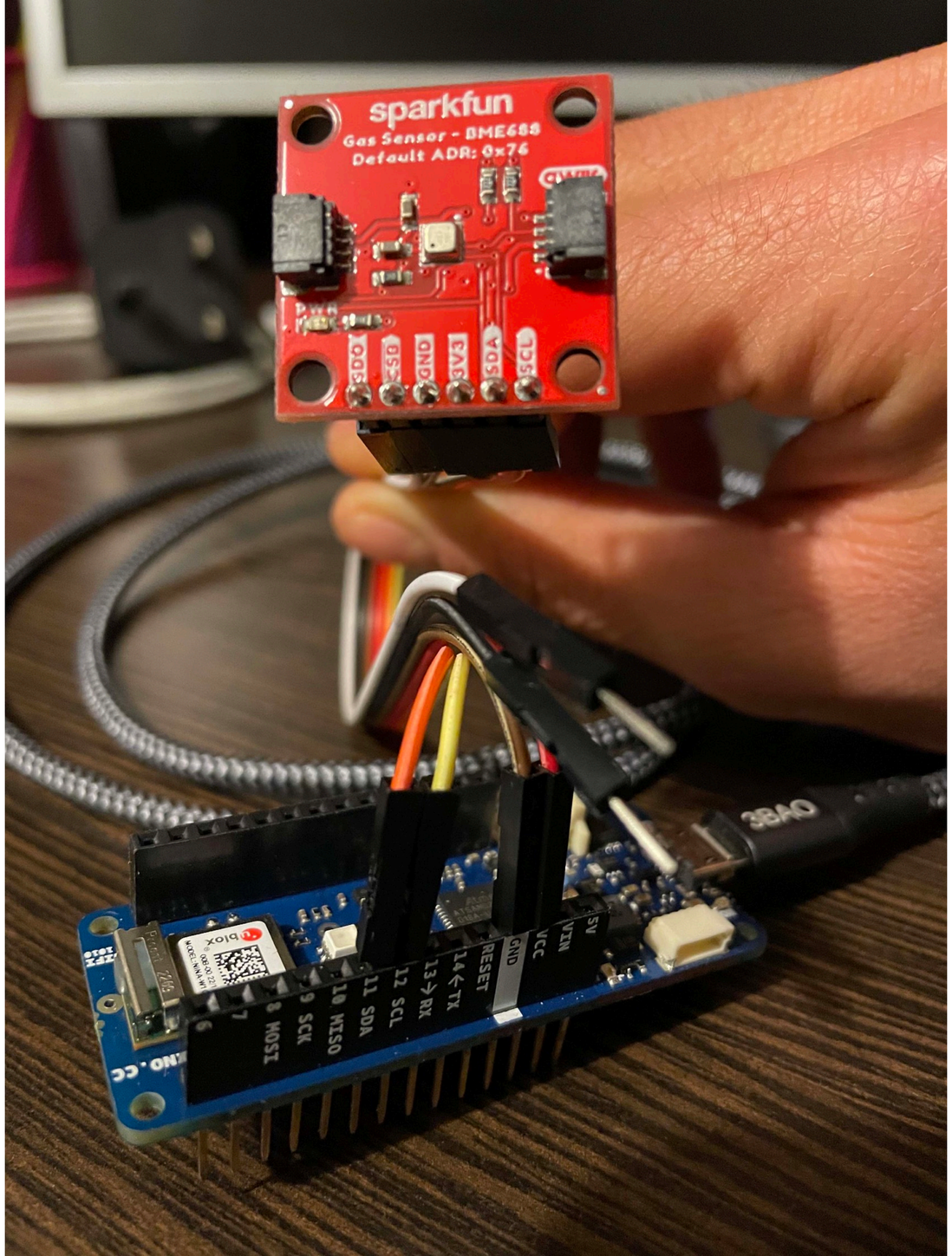
sparkfun
Gas Sensor - BME688
Default ADR: 0x76
SDO
CS
GND
3V3
SDA
SCL
RESET
GND
VCC
VIN
5V
14 TX
13 RX
12 SCL
11 SDA
10 MISO
9 SCK
8 MOSI
3BAO